ENCOMPASS | Accounts Payable

Table of Contents

Chapter 1 | Payables Overview 1.1

Chapter 2 | Entering Vouchers 2.1

Chapter 3 | Approving and Submitting Vouchers for Payment . . 3.1

Chapter 4 | Trouble Shooting and Correcting Vouchers 4.1

Chapter 5 | Running ENCOMPASS Reports & Inquiries. 5.1

Chapter 6 | Processing SDO Payments 6.1

Appendix A | Understanding Chartfields A.1

Exclusively for use by the State of Indiana
Issue Date: 01/18/2008

ENTAP Training

Course Description

This course provides hands-on instruction in processing payments in the Payables application. Participants learn the flow of external and internal invoices from vendor, to voucher, to payment, to General Ledger accounting entries. Participants also become familiar with many operational Payables reports and examine how Payables integrates with other ENCOMPASS applications.

Course Objective

By the end of this course, agency users will be able to:

- Enter various types of vouchers
- Approve vouchers
- Submit vouchers to AOS for payment
- Troubleshoot and correct vouchers
- Load high-volume payments
- Record manual SDO payments
- Process payments for SDO vouchers
- Process reimbursements for SDO payments

Chapter 1

Payables Overview

Chapter Overview

This chapter provides a high-level overview of Payables, presents the changes to Payables resulting from the ENCOMPASS implementation, and examines the objectives of the course. We will look at the major features and functions of Payables and examine the points of integration between Payables and other ENCOMPASS applications.

Chapter Objectives

By the end of this chapter, you will be able to:

- Explain the high-level req-to-check process in ENCOMPASS
- Explain the voucher lifecycle
- Identify the changes to Payables as a result of the ENCOMPASS implementation

Changes in ENCOMPASS

When the new system is live, many changes will occur for the State of Indiana due to AOS using the ENCOMPASS system. Below is a listing of many of the changes you will see when ENCOMPASS goes live.

- VINQ does not exist for processing. All vendor records are in ENCOMPASS.
- There will no longer be a process to update AOS check numbers.
- The “Object” field is now named the “Account” field.
- All POs must have a receipt before a voucher can be entered for them.
- All vouchers must have a receipt date, even vouchers that do not have a PO.
- The payment method (on the Payments page) will default to ACH. Agencies should not change the payment method, unless they are entering an SDO voucher.
- Users no longer have to enter a 1099 withholding code. These codes will now default based on vendor and account (object) number.
- Document tolerance, budget checking, and posting are run as batch processes every two hours. DO NOT perform these processes yourself.
- Agencies will no longer process pay cycles, unless the agency processes SDO pay cycles. All non-SDO payments are processed by AOS.
- Agencies will no longer enter adjustment vouchers to record late payment interest. Interest will now be calculated and recorded within ENCOMPASS, when payment is made.
- Payments to vendors will be consolidated by business unit (agency).
- Federal funds are no longer exempt from budget checking.
- Searching for a vendor tax identification number (TIN) will now be a masked search. You will be able to search by TIN but won’t see the TIN on the voucher.
- All ENCOMPASS document numbers are now auto-generated: vendor records, requisition, purchase orders, vouchers, and payments.
- Payments are created based on the scheduled due date of the voucher. Therefore, the vouchers submitted to AOS in a single pouch will not all be paid at the same time.
- The accounting date on vouchers does not need to be future-dated.

New ChartFields and Codes

New ChartField Name	Replaces	Description
Fund (required field)	Fund/Center	Fund is the primary means within a Business Unit for tracking and relating specific sources and uses of revenues or budget authority.
Account (required field)	Object	The account number is used in the traditional manner for classifying specific transactions according to the nature of the receipt, expenditure, or effect on the financial position of the Fund or entity.
Program (required field)	(No change)	The Program ChartField is a classification of an activity according to the purpose or objective of the activity. One initiative, PROBE, supported the identification of these activities, and Program values have been established from the resulting report.
Department (required field)	(No change)	The Department represents an organizational function to which expenditures and other activities must be identified. Its values correspond directly to the Department values in the PeopleSoft Human Resources module.
Product		The Product ChartField is used to track costs of goods or services provided to other State agencies.
Locality	Class	The Locality ChartField identifies a geographic location or geographic area.
Incident		Incident is a transactional classification used to track costs associated with a particular event or activity, such as a hurricane or tornado, as determined by the Statewide Financial Policy Group.
Project		A Project is an accumulation of costs for a definite period of time. Includes all federal grants, capital projects, and construction.
Budget Reference (required field)	(No change)	The Budget Reference is used to identify the State fiscal year associated with the particular transaction.

APT01

1.4

Payables Control Hierarchy

Business Units sit on top of a control hierarchy that facilitates both voucher entry and payment processing. When you enter default values and select processing rules on the levels that govern this default hierarchy, the system initially validates the information for you—and validates it again during transaction processing to verify it is using the correct values assigned at the level you designate.

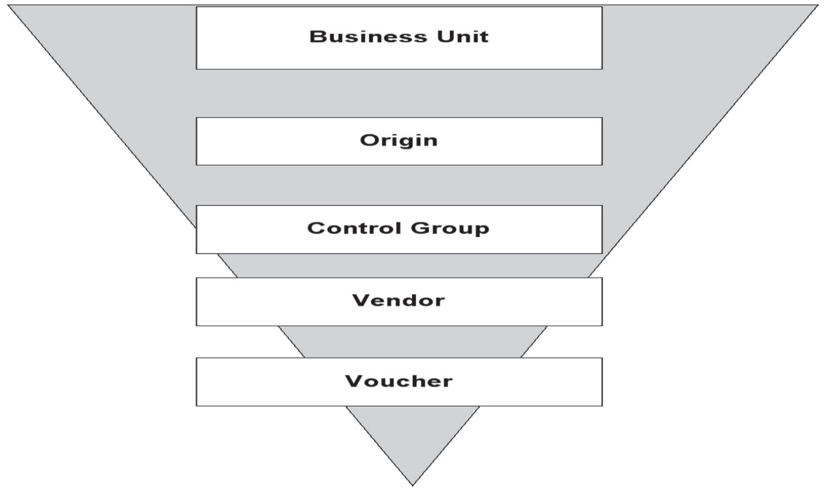

APD01

Term	Description
Business Unit	Each agency of the State of Indiana is a business unit. This designation allows all accounts payable transactions to be recorded and tracked separately by each agency.
Origin	The initials of the person who is entering the voucher.
Control Group	Used to group vouchers together for the purpose of controlling voucher input. Generally, used for assigning vouchers to data-entry personnel and for verifying input. Batch voucher input is a common use of a control group. The State does not use control groups for online voucher entry; however, the Voucher Build process does create vouchers in control groups
Vendor	The party who is being paid.
Voucher	Once an invoice is entered into the system it is considered a voucher.

APT02

1.5

Requisition-to-Check Process

At the State of Indiana, the requisition - to - check process is changing. Most purchases require a requisition, which is used to build a purchase order. When the goods or services are received, a receipt is entered into ENCOMPASS. When the invoice (voucher) is entered into ENCOMPASS, the receipt must be copied over to the voucher before payment will be made. Some exceptions to this rule are for invoices such as utility bills. For these vouchers, a received date is required on the voucher for the date the service was received.

When goods or services are requested, users (requisition entry role) create a requisition using the e-Procurement menu option in ENCOMPASS. The requisition is budget checked, which creates a pre-encumbrance on the General Ledger. This means the amount of the requisition will be subtracted from budget dollars available for spending. If the requisition passes budget check, it goes through an approval process before a purchase order is created.

Once the requisition is approved, the user (PO entry role) creates a purchase order from the requisition. The PO goes through the budget-checking process as well. When this occurs, the pre-encumbrance is closed and an encumbrance is created. The PO is then dispatched to the vendor for the purchase of the goods or services.

When the goods or services are received, the user goes into ENCOMPASS and records the receipt of the goods or services. The encumbrance remains in the system as the voucher has not yet been entered or posted.

The vendor sends an invoice to the agency for the goods or services, and the agency enters the invoice as a voucher in ENCOMPASS by copying the PO Receipt data. Vouchers must go through document tolerance checking to verify that the invoice and the PO meet the tolerances created by the State. These tolerances are the lesser of 10% or $500. The voucher also goes through the budget-checking process, which relieves the encumbrance and records the actual expenditure to the General Ledger. In addition, vouchers go through the agency approval process to verify accuracy of input. Once the voucher has been approved at the agency level, the actual invoices (with the required documentation, SOIAP008 query cover, and the transmittal forms) are sent to AOS for final approval and payment processing. Before sending the original documentation to AOS, agencies should make copies for their records.

AOS approves or denies the vouchers sent to them. For all of the approved vouchers, payments are made—either by check or by ACH—and the process is complete. If AOS denies a voucher, the voucher is sent back to the processor for correction with an explanation of what needs to be changed. After changes are made, the voucher goes through the approval process again before AOS processes the payment.

Voucher Lifecycle

All agencies will enter vouchers as they have done in the past. A change occurring in January is that most vouchers will now be associated with a purchase order and receiving information, which is entered into ENCOMPASS. However, some vouchers such as phone bills will not have a purchase order associated with them, so the process for those vouchers is different. On the next couple of pages are two flow charts that illustrate the process for PO and non-PO vouchers.

One major difference in voucher processing is that all purchase orders are now encumbered. What this means is that when a voucher is entered into ENCOMPASS, a batch process will run to budget check the amount on the voucher against the budget amount in the fund to ensure there is enough money in the fund to pay for the purchase. This is a change in ENCOMPASS as not all purchase orders were encumbered before.

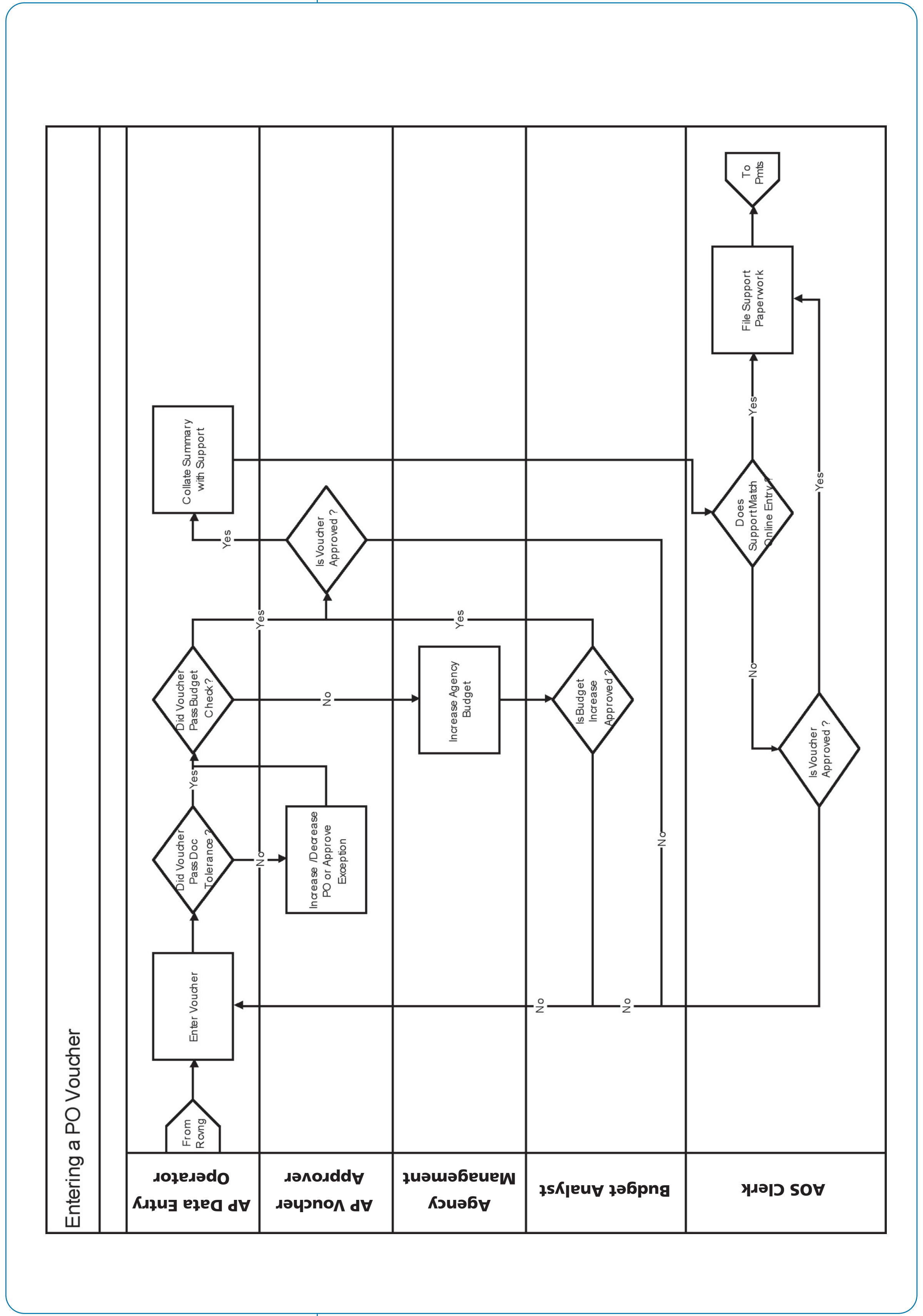
Entering a PO Voucher
AP Data Entry Operator
AP Voucher Approver
Agency Management
Budget Analyst
AOS Clerk
From Rcvng
Enter Voucher
Did Voucher Pass Doc Tolerance ?
No
Increase /Decrease PO or Approve Exception
Yes
Did Voucher Pass Budget Check?
No
Increase Agency Budget
Is Budget Increase Approved ?
Yes
Yes
No
Is Voucher Approved ?
Yes
No
Collate Summary with Support
Does Support Match Online Entry ?
Yes
File Support Paperwork
To Pmts
No
Is Voucher Approved ?
Yes
No

APD02

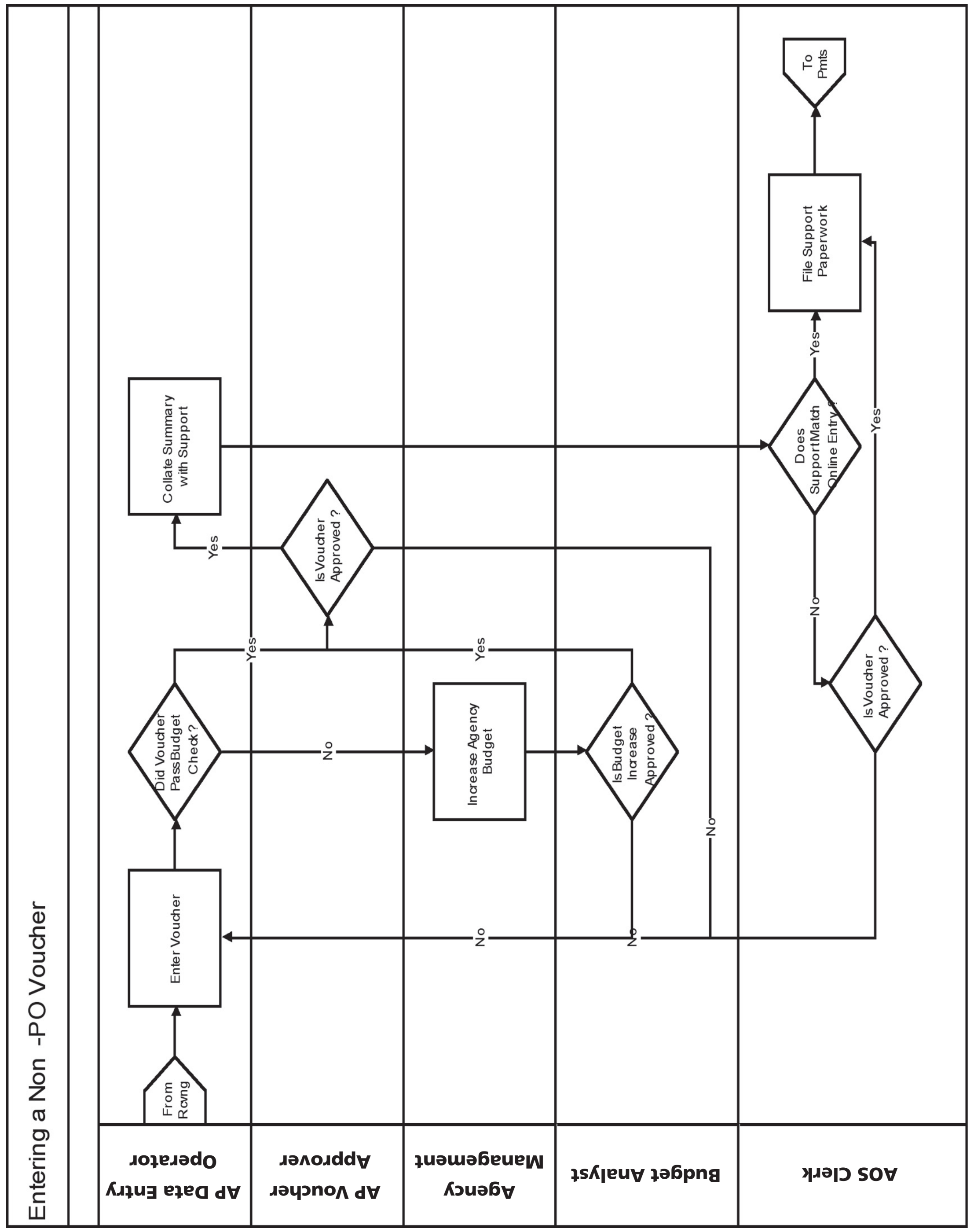
Entering a Non -PO Voucher
AP Data Entry Operator
AP Voucher Approver
Agency Management
Budget Analyst
AOS Clerk
From Rcvng
Enter Voucher
Did Voucher Pass Budget Check?
No
Yes
Increase Agency Budget
Is Budget Increase Approved?
Yes
No
Is Voucher Approved ?
Yes
No
Collate Summary with Support
Does Support Match Online Entry?
Yes
No
Is Voucher Approved ?
Yes
No
File Support Paperwork
To Pmts

APD03

Running the SOIAP008 Query

After entering vouchers users should run the SOIAP008 query, which lists the majority of the important fields entered on vouchers. Users should then audit the invoices against the query to verify that all vouchers have been entered accurately and to check for budget checking errors, posting status, and other common errors. This query will also be used as backup information on invoices sent over to AOS for processing.

Batch Processing

There are three processes that run throughout the day every two hours automatically between the hours of 7 am and 5 pm. Users generally should never run these processes themselves.

Process	Description
Document Tolerance	This process verifies that the invoice is within tolerances set for the corresponding purchase order. The tolerances are the lesser of 10% or $500. If an invoice is entered outside of these tolerances, the voucher will have an Invalid status and will require a change order to be entered.
Budget Checking	The Budget Checking process ensures that the invoice entered does not exceed the total budget amount.
Voucher Posting	This process posts the accounting entries on the voucher so they can be loaded into the General Ledger the next time the Journal Generator process is run for the GL (usually every night).

APT03

Voucher Approval and Payment Processing

After vouchers have been entered into ENCOMPASS, they must be approved by the different approvers within the agency. Each agency has the option to decide how many levels of approvers it will have, as long as the agency meets the minimum levels of approval as set forth by the State Board of Accounts. After agency approval, the collator will run the transmittal forms for each invoice and will attach all of the invoices ready for payment, along with any supporting documentation and the SOIAP008 query cover sheet. This packet will be sent to AOS for approval and payment.

Before AOS runs the pay cycle, they will audit the transmittal form to the actual invoices. The final approval comes from AOS before payment processing begins. If they deny a voucher, that voucher will be sent back to the processor for fixing.

SDO Voucher Lifecycle

SDO vouchers are entered as they have been in the past. Agencies that manually write SDO checks enter vouchers into ENCOMPASS and record the check number on the voucher Payments page. Agencies that print SDO checks from ENCOMPASS enter vouchers and run a Pay Cycle to create payments by printing them on check stock. Vouchers will still need to be approved.

To receive reimbursement from AOS for SDO payments, you create an SDO reimbursement voucher and print an SDO Transmittal Form to submit to AOS. See Chapter 6: Processing SDO Payments for instructions on performing these tasks.

Forms

Forms currently on the AOS website will have new financial information. You must use the system and the ENCOMPASS forms, such as the Report of Collections and Transmittals.

Reports

The reports agencies use to balance every day are the same reports you have in Alchemy, for example:

- Agency Revenue Activity
- Report of Payments Issued by Type
- Fixed Assets Report
- Federal Reporting Reports